County of Orange
OC PUBLIC WORKS
Architecture & Engineering

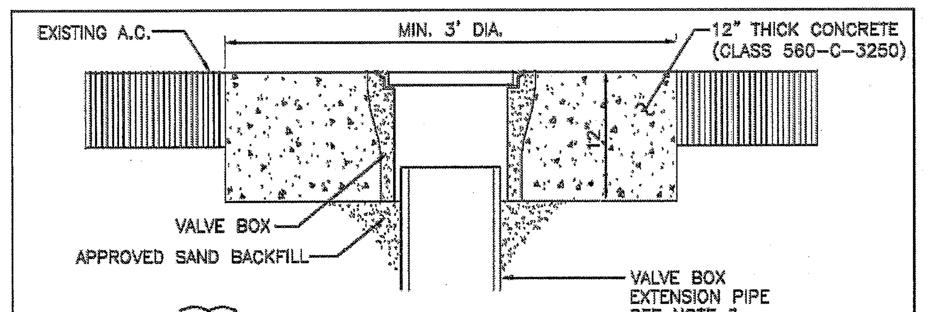

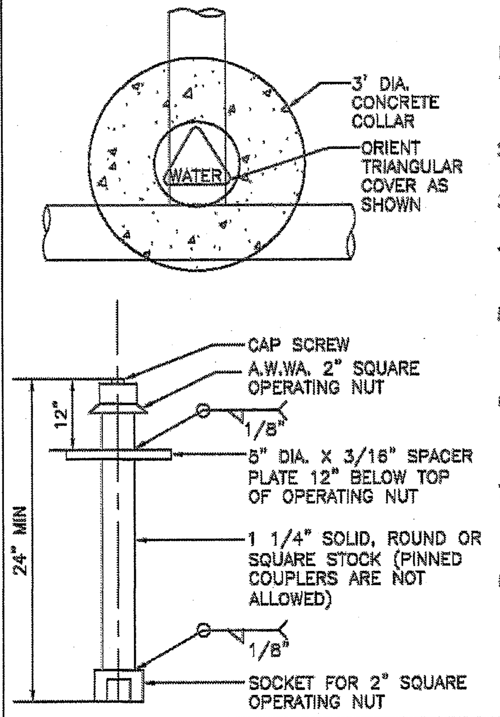

NOTES:
1. CITY INSPECTOR SHALL BE NOTIFIED 24 HRS PRIOR TO RAISING VALVE BOX AT 714-744-5526
2. VALVE BOX (BROOKS #4-TT, EISEL #4TT, OR EQUAL)
3. EXTENSION PIPE SHALL BE 8" SDR 35 P.V.C.
4. SAND BACKFILL SHALL BE REQUIRED AROUND VALVE, VALVE BOX, AND EXTENSION.
5. THE CONTRACTOR SHALL PROVIDE VALVE TIES TO THE CITY INSPECTOR FOR REVIEW AND ACCEPTANCE PER SECTION 100.17.
6. PROVIDE VALVE STEM EXTENSION WHEN DEPTH TO OPERATING NUT EXCEEDS 48" (FABRICATE EXTENSION TO FIELD MEASUREMENT – SEE NOTE 7)
7. NO VALVE STEM EXTENSION SHALL BE LESS THAN 2 FEET IN LENGTH. TERMINATE EXTENSION 24" FROM FINISHED GRADE.
8. PROVIDE ADDITIONAL SPACER PLATE WHEN DISTANCE TO BOTTOM SOCKET EXCEEDS 5 FEET.

REVISION	DRAWN	APP'D	DATE	CITY OF ORANGE WATER STANDARDS	DATE: OCT. 2007
APPROVED CITY WATER MANAGER		10/15/07 DATE		STANDARD — VALVE BOX INSTALLATION	STANDARD DRAWING NUMBER OWD-101

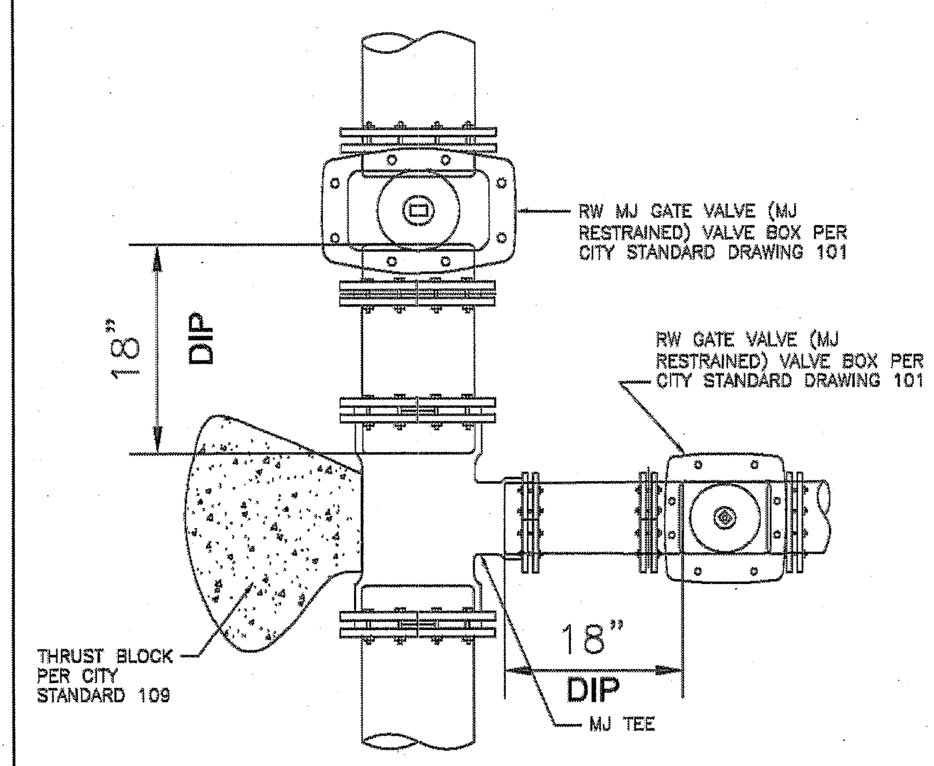

NOTE:
MECHANICAL JOINT CONNECTIONS SHALL BE RESTRAINED AND THE DESIGN OF SUCH RESTRAINT SYSTEM SHALL INCORPORATE A FOLLOWER GLAND, INCLUDING A MECHANISM WHICH WHEN ACTIVATED IMPARTS MULTIPLE WEDGING ACTING AGAINST THE PIPE. MECHANICAL JOINT RESTRAINT SHALL BE EBAA IRON MEGALUG, UNIFLANGE SERIES 1400, THE FORD METER BOX COMPANY, OR APPROVED EQUAL. FIELD WELDMENTS WILL NOT BE ALLOWED.

REVISION	DRAWN	APP'D	DATE	CITY OF ORANGE WATER STANDARDS	DATE: JUN. 2008
APPROVED CITY WATER MANAGER		10/15/07 DATE		STANDARD — MJ VALVE INSTALLATION	STANDARD DRAWING NUMBER OWD-108

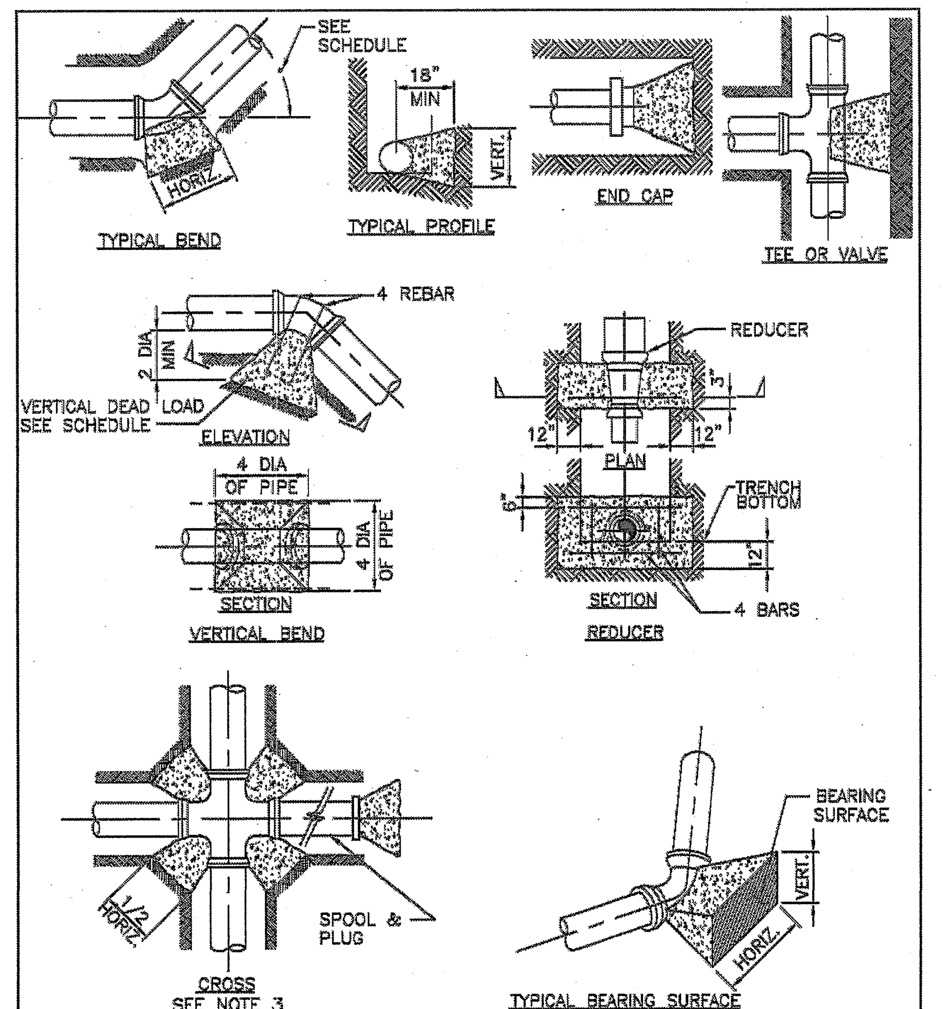

REVISION	DRAWN	APP'D	DATE	CITY OF ORANGE WATER STANDARDS	DATE: OCT. 2007
APPROVED CITY WATER MANAGER		10/15/07 DATE		STANDARD — THRUST BLOCK DETAILS	STANDARD DRAWING NUMBER OWD-109 SHT. 1 OF 2

NOTES:
1. THRUST BLOCK BEARING AREA BASED ON ALLOWABLE SOIL BEARING VALUE OF 1500 psf PRESSURE AND 225 psi LINE PRESSURE WITH 3'-0" COVER MINIMUM.
FOR BEARING = 1000 psf, 1.5 X AREA SHOWN
FOR BEARING = 500 psf, 3.0 X AREA SHOWN
2. ALL THRUST BLOCKS SHALL BE CLASS 420-C-2000 CONCRETE (CONTAINING NOT LESS THAN FOUR SACKS PER CUBIC YARD) AND PLACED AGAINST UNDISTURBED SOIL.
3. REINFORCING STEEL SHALL CONFORM TO ASTM A15 AND A305 INTERMEDIATE GRADE.
4. CONCRETE SHALL NOT EXTEND ONTO FLANGE OR ADJOINING PIPE. PIPE AND FITTING JOINTS SHALL BE ACCESSIBLE FOR REPAIR

MINIMUM SIZE OF THRUST BLOCK BEARING SURFACE

PIPE	11 1/4' BEND		22 1/2' BEND		45' BEND		90' BEND		TEE		END CAP	
SIZE	HORIZ.	VERT.	HORIZ.	VERT.	HORIZ.	VERT.	HORIZ.	VERT.	HORIZ.	VERT.	HORIZ.	VERT.
4"	1'-6"	0'-9"	1'-8"	0'-9"	2'-4"	1'-0"	3'-3"	1'-4"	2'-8"	1'-3"	2'-8"	1'-3"
6"	1'-9"	1'-0"	2'-6"	1'-3"	3'-6"	1'-6"	4'-8"	2'-3"	4'-0"	2'-0"	4'-0"	2'-0"
8"	2'-4"	1'-0"	3'-4"	1'-6"	4'-8"	2'-0"	6'-4"	3'-0"	5'-4"	2'-4"	5'-4"	2'-4"
10"	3'-0"	1'-4"	4'-3"	1'-9"	5'-9"	2'-6"	7'-10"	3'-6"	6'-8"	3'-0"	6'-8"	3'-0"
12"	3'-6"	2'-0"	5'-0"	2'-3"	6'-10"	3'-0"	9'-8"	4'-3"	7'-10"	3'-8"	7'-10"	3'-6"

VERTICAL DEAD LOAD (MIN. CUBIC YARDS)

PIPE SIZE	11 1/4' BEND	22 1/2' BEND	45' BEND
4"	0.3	0.5	0.9
6"	0.5	1.0	2.0
8"	0.9	1.8	3.5
10"	1.4	2.8	5.5
12"	2.0	4.0	7.8

REVISION	DRAWN	APP'D	DATE	CITY OF ORANGE WATER STANDARDS	DATE: OCT. 2007
APPROVED CITY WATER MANAGER		10/15/07 DATE		STANDARD — THRUST BLOCK DETAILS	STANDARD DRAWING NUMBER OWD-109 SHT. 2 OF 2

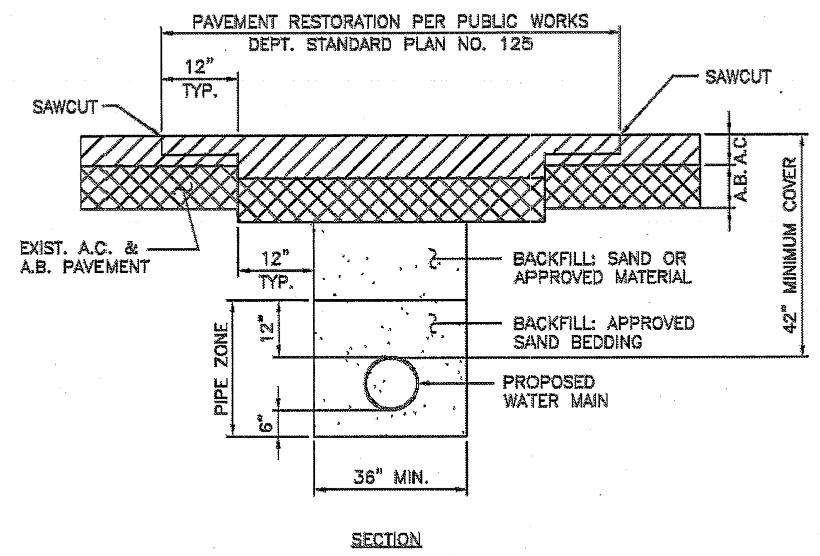

SECTION
(NOT TO SCALE)

NOTE:
TRANSVERSE TRENCHES SHALL BE BACKFILLED WITH 150-E-100 CONCRETE SLURRY PER PUBLIC WORKS DEPARTMENT STANDARD PLAN NO. 125, EXCEPT WITHIN PIPE ZONE.

REVISION	DRAWN	APP'D	DATE	CITY OF ORANGE WATER STANDARDS	DATE: OCT. 2007
APPROVED CITY WATER MANAGER		10/15/07 DATE		STANDARD — TYPICAL TRENCH SECTION	STANDARD DRAWING NUMBER OWD-110

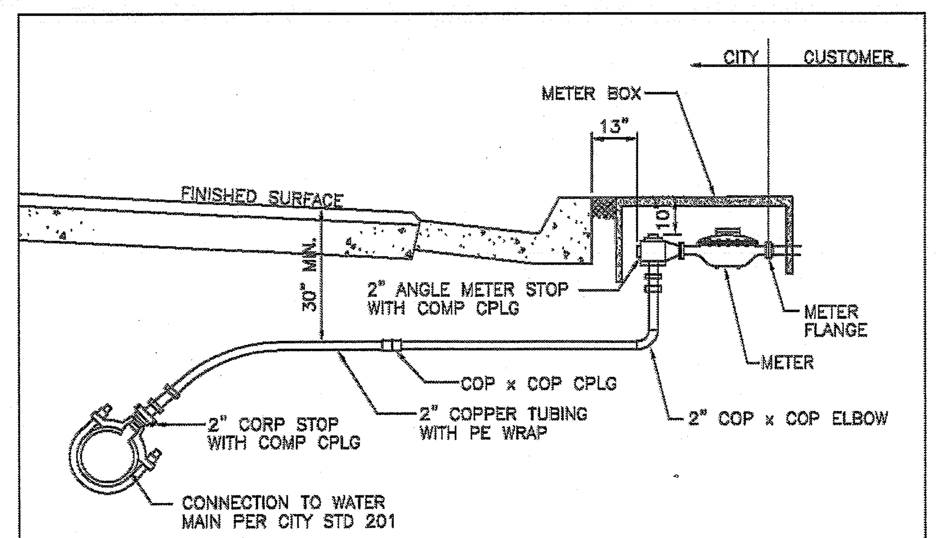

2" SERVICE

2" COPPER TUBING, TYPE K WITH PE WRAP	VARIES
2" CORP STOP	1 EA
2" COPPER x COPPER 90 ELBOW	1 EA
2" COP x COP COUPLING	VARIES
2" ANGLE STOP	1 EA
2" DISC METER (SEE NOTE 2)	1 EA
2" METER FLANGE J-129	2 EA
METER BOX COMPLETE – 66-S OR EQUAL	1 EA

NOTES:
1. FOR SERVICE TAP REQUIREMENTS, SEE CITY STD 201
2. APPROVED REMOTE READ METERS REQUIRED FOR NEW DEVELOPMENTS PER CITY STD 213
3. SOLDER SHALL BE 5% SILVER SOLDER, HARRIS CO, STAY BRITE, OR APPROVED EQUAL

REVISION	DRAWN	APP'D	DATE	CITY OF ORANGE WATER STANDARDS	DATE: OCT. 2007
APPROVED CITY WATER MANAGER		10/15/07 DATE		STANDARD — 2" SERVICE INSTALLATION (COPPER TUBING)	STANDARD DRAWING NUMBER OWD-205

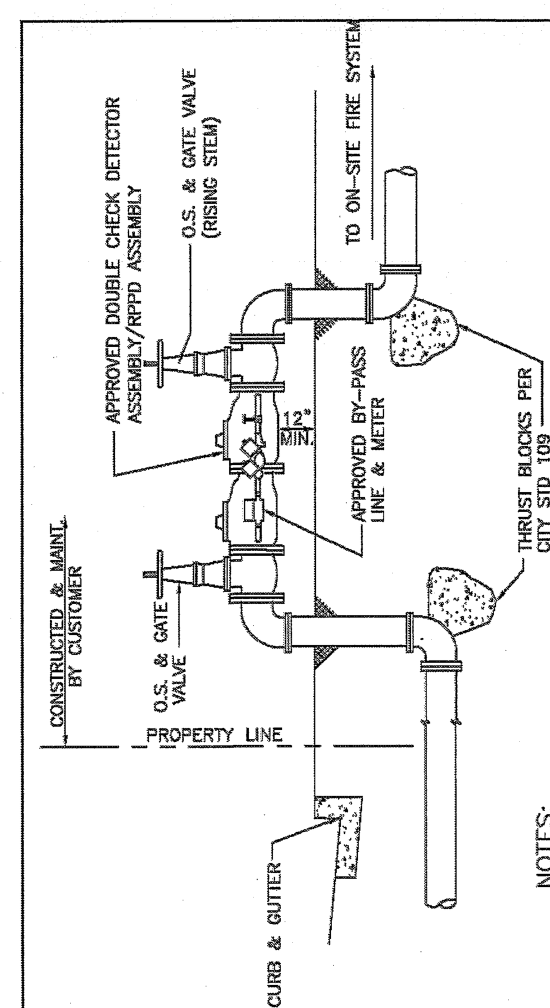

NOTES:
1. BACKFLOW PREVENTION DEVICES WHICH ARE APPROVED FOR INSTALLATION IN THE CITY OF ORANGE ARE THOSE DEVICES WHICH ARE APPROVED FOR USE BY THE UNIVERSITY OF SOUTHERN CALIFORNIA FOUNDATION FOR CROSS CONNECTION CONTROL AND HYDRAULIC RESEARCH.
2. CUSTOMER SHALL SUPPLY, INSTALL, & MAINTAIN ALL ON-SITE MATERIALS
3. GATE VALVES SHALL BE A RISING STEM TYPE APPROVED BY THE FIRE DEPT.
4. BY-PASS METER SHALL BE A HERSEY MMD II OR TRIDENT 10 DISC METER OR EQUAL
5. INSPECTION SHALL BE MADE BY BOTH THE FIRE DEPT. & CITY INSPECTOR.

REVISION	DRAWN	APP'D	DATE	CITY OF ORANGE WATER STANDARDS	DATE: OCT. 2007
APPROVED CITY WATER MANAGER		10/15/07 DATE		STANDARD — DOUBLE CHECK DETECTOR/ RPPD ASSEMBLY	STANDARD DRAWING NUMBER OWD-302

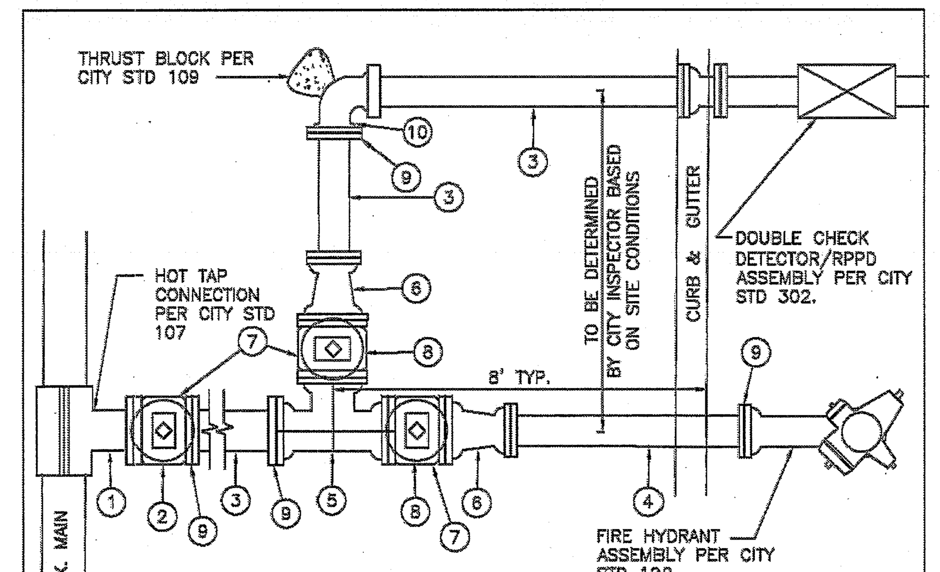

(1)	TAPPING SLEEVE (SIZE VARIES)	1 EA.
(2)	TAPPING VALVE – FLG. X M.J. (SIZE VARIES)	1 EA.
(3)	D.I.P. (SIZE VARIES) WITH PE WRAP	VARIES
(4)	6" D.I.P. WITH PE WRAP	VARIES
(5)	TEE – M.J. (SIZE VARIES)	1 EA.
(6)	_" X 6" MJ REDUCER – FLG. (VARIES)	IF NECESSARY
(7)	VALVE BOX WITH EXT. PIPE	3 EA.
(8)	RESILIENT WEDGE VALVE – MJ (SIZE VARIES)	1 EA.
(9)	M.J. RESTRAINED JOINT	4 EA.
(10)	90° BEND – M.J. (SIZE VARIES)	1 EA.

NOTES:
1. THIS INSTALLATION SHALL BE USED WHEN THE PROPOSED FIRE DEPARTMENT CONNECTION IS LOCATED GREATER THAN 40' FROM AN EXISTING CITY FIRE HYDRANT.
2. SIZE OF LATERAL TO MATCH SIZE OF DOUBLE CHECK DETECTOR/RPPD ASSEMBLY

REVISION	DRAWN	APP'D	DATE	CITY OF ORANGE WATER STANDARDS	DATE: JUN. 2008
APPROVED CITY WATER MANAGER		10/15/07 DATE		STANDARD — COMBINATION FIRE HYDRANT & DOUBLE CHECK DETECTOR/RPPD ASSEMBLY LONG SIDE ARTERIAL HWY CROSSING	STANDARD DRAWING NUMBER OWD-303

REGISTERED PROFESSIONAL ENGINEER — KENNETH C. TAYLOR — NO. 56185 — EXP. 12-31-10 — CIVIL ENGINEER — STATE OF CALIFORNIA

PLANS PREPARED BY:
WILLDAN Engineering
2401 East Katella Avenue, Suite 450
Anaheim, CA 92806-6073
714/978-8200 fax 714/978-8299
R.C.E. NO. 56185 (EXPIRES 12-31-10) 11/26/09 DATE

REVISIONS

NO.	DESCRIPTION	APPR.	DATE

REVIEWED BY:
CITY OF ORANGE WATER DATE

CITY OF ORANGE
OFFSITE WATER IMPROVEMENT PLAN
FOR
401 S. TUSTIN STREET

Plan No.
Sheet W-3

Revisions 0742
Sym.	Descrip.	Date	By

Consultants
WILLDAN Engineering 2401 EAST KATELLA AVENUE, SUITE 450 ANAHEIM, CALIFORNIA 92806-6073 714/978-8200 FAX 714/978-8299
PREPARED UNDER THE SUPERVISION OF KENNETH C. TAYLOR 56185 R.C.E. 11/26/09 DATE
Drawn ___ Chkd. ___ Date 11/26/09

A-E Seal
REGISTERED PROFESSIONAL ENGINEER KENNETH C. TAYLOR NO. 56185 EXP. 12-31-10 CIVIL STATE OF CALIFORNIA

A-E ALEXANDER + HIBBS, AIA, INC.
ALEXANDER + HIBBS, AIA, INC. Architecture and Planning 1200 N. JEFFERSON ST., SUITE A ANAHEIM, CALIFORNIA 92807 (714) 630-3686
Design ___ Chkd. ___ Date Nov. 26, 2009

Sht Title
Project COUNTY OF ORANGE HEALTH CARE AGENCY 401 SOUTH TUSTIN STREET
401 SOUTH TUSTIN STREET ORANGE, CA 92866
PROJ. NO. 100-042-210-1900 H2407P20

Plan No. 52333-03608
Sheet W-3

U:\jn17336_401_S_Tustin_Renovation\PS&E\Plans\pl-CITY-WATR-03.dwg Nov 13, 2009 – 11:22am

0742 COUNTY OF ORANGE HEALTH CARE AGENCY 401 SOUTH TUSTIN STREET U:\jn17336_401_S_Tustin_Renovation\PS&E\Plans\pl-CITY-WATR-03.dwg Plotted: 11/13/2009 11:22 AM