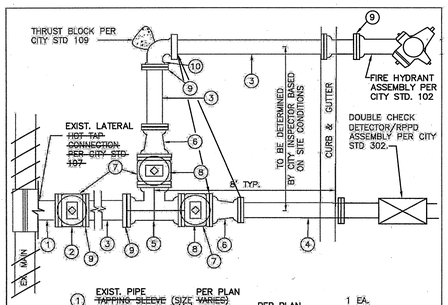

	EXIST. PIPE	PER PLAN
1	~~TAPPING SLEEVE (SIZE VARIES)~~	
2	TAPPING VALVE – ~~FLG.~~ X M.J. (SIZE ~~VARIES~~)	PER PLAN 1 EA.
3	D.I.P. (SIZE VARIES) WITH PE WRAP	1 EA.
4	6" D.I.P. WITH PE WRAP	VARIES
5	TEE – M.J. (SIZE VARIES)	VARIES
6	8" X 6" MJ REDUCER – FLG. (VARIES)	1 EA.
7	VALVE BOX WITH EXT. PIPE	IF NECESSARY
8	RESILIENT WEDGE VALVE – MJ (SIZE VARIES)	3 EA.
9	M.J. RESTRAINED JOINT	1 EA.
10	90° BEND – M.J. (SIZE VARIES)	4 EA.
		1 EA.

NOTES:

1. THIS INSTALLATION SHALL BE USED WHEN THE PROPOSED FIRE DEPARTMENT CONNECTION IS LOCATED GREATER THAN 40' FROM AN EXISTING CITY FIRE HYDRANT.
2. SIZE OF LATERAL TO MATCH SIZE OF DOUBLE CHECK DETECTOR/RPPD ASSEMBLY

REVISION	DRAWN	APP'D	DATE	CITY OF ORANGE WATER STANDARDS	DATE: JUN. 2008
				STANDARD	STANDARD DRAWING NUMBER
APPROVED: CITY WATER MANAGER			10/15/07 DATE	COMBINATION FIRE HYDRANT & DOUBLE CHECK DETECTOR/RPPD ASSEMBLY LONG SIDE ARTERIAL HWY CROSSING	MODIFIED OWD-303

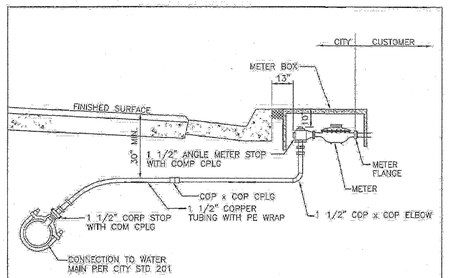

1-1/2" SERVICE

1-1/2" COPPER TUBING, TYPE K WITH PE WRAP	VARIES
1-1/2" CORP STOP	1 EA
1-1/2" COPPERxCOPPER 90 ELBOW	1 EA
1-1/2" COPPERxCOPPER COUPLING	VARIES
1-1/2" ANGLE STOP	1 EA
1-1/2" DISC METER (SEE NOTE 2)	1 EA
1-1/2" METER FLANGE J-129	2 EA
METER BOX COMPLETE 38-S OR EQUAL	1 EA

NOTES:

1. FOR SERVICE TAP REQUIREMENTS, SEE CITY STD 201
2. APPROVED REMOTE READ METERS REQUIRED FOR NEW DEVELOPMENTS PER CITY STD 213
3. SOLDER SHALL BE 50% SILVER SOLDER, HARRIS CO, STAY BRITE, OR APPROVED EQUAL.

REVISION	DRAWN	APP'D	DATE	CITY OF ORANGE WATER STANDARDS	DATE: OCT. 2007
				STANDARD	STANDARD DRAWING NUMBER
APPROVED: CITY WATER MANAGER			10/15/07 DATE	1-1/2" SERVICE INSTALLATION (COPPER TUBING)	OWD-204

CITY OF ORANGE
WATER MAIN CONSTRUCTION NOTES
SECTION 100

CITY INSPECTOR SHALL BE NOTIFIED OF ANY AND ALL WATER SYSTEM CONSTRUCTION 24 HOURS PRIOR TO BEGINNING CONSTRUCTION AT (714) 744-5526.

100.1 Materials shall be handled and installed in a workmanlike manner by contractor holding a valid Class A or C-34 Specialty License from the State of California.

100.2 Excess material shall be returned to the Water Yard prior to final approval.

100.3 Normal working hours are 6:30 a.m. to 4:00 p.m. Monday thru Thursday, excluding City-observed holidays. The City Inspector shall be notified 24 hours prior to any work.

100.4 Water mains shall be installed after construction of the curbs and gutters, unless a special waiver of this requirement is approved by the City Water Manager.

100.5 Water mains and appurtenances shall be installed in accordance with A.W.W.A. Standard for "Installation of Ductile-Iron Water Mains and their Appurtenances", C-600 latest version and the "City of Orange Water Standards".

100.6 Pipe and fittings: Water pipeline materials in the City of Orange shall be ductile iron pipe with push-on type joint with a nominal laying length of eighteen (18) feet. The fittings shall be push-on type joint, mechanical joint, or flanged end connections.

100.7 Trench excavation. The pipeline, fittings, and appurtenances shall be installed at a minimum depth of three and one-half (3.5) feet of cover relative to finished grade unless otherwise indicated on construction plans. An excavation permit shall be required for any excavation within public right-of-way.

100.8 Trench backfill: Backfill within the pipe zone, six (6) inches below to twelve (12) inches above the pipe, shall be sand or other select material, as determined by the City Inspector. Rocky or unsuitable bedding and backfill material shall be replaced with approved material. Gravel or crushed stone are approved material for rocky or unsuitable bedding conditions. Compaction shall be completed to the satisfaction of the City Inspector, and no case shall be less than 90% to relative density.

Backfill shall be done in accordance with the laying condition specified. All backfill shall be free from glass, cinders, ashes, refuse, vegetable or organic material, boulders, rocks or stone, frozen soil, or other unsuitable material.

If excavated material is indicated on the plans or specified for backfill and there is a deficiency as a result of rejection of a part of this material, the required amount of sand, gravel, or other approved material must be provided.

For purposes of definition:

1. Sand is material graded from fine to coarse, containing less than 10 percent by weight of loam and clay, that all passes a ¼-inch sieve with no more than 5 percent by weight remaining on a No. 4 sieve.
2. Gravel is a reasonably uniform combination of stone, containing none larger than 2-inches and not containing excessive amounts of clay and loam.
3. Crushed stone is limestone or dolomite ledge-rock material that all passes a ½-inch sieve with no more than 25 percent passing a No. 100 sieve.

100.9 Main line taps: All main line taps 4-inches and greater in diameter to existing City mains shall be made by City crews and charged to the project. The project shall be responsible for excavation and backfill, maintaining temporary patch, compaction of backfill material, raising of valve box to finish grade, and permanent pavement surrounding the valve box.

100.10 Hydrant assembly: Hydrants shall be installed per Standard Drawings 102, 103, and 104, where required.

100.11 Tie-ins: Connections to existing City water mains and/or tapping valves shall be made only after successful pressure test and disinfection has been completed.

100.12 Valve installation: Valves shall be installed per Standard Drawing 108. Thrust blocks and restrained mechanical joints shall be installed as shown on Standard Drawing 108.

100.13 Thrust blocking: All changes in pipe direction or grade shall be adequately supported with concrete, per Standard Drawing 109, or other approved means.

100.14 Polyethylene wrap: Polyethylene tubing shall be installed over all ductile iron pipe, copper tubing, valves, fittings, and appurtenances per A.W.W.A "Standard for Polyethylene Encasement for Ductile-Iron Pipe Systems" C-105, latest edition.

100.15 Pressure test: The entire water system, including pipeline, connections, fittings, and appurtenant equipment shall be subject to a hydrostatic pressure test of not less than 225 pounds per square inch (psi) for a minimum of two hours. The water necessary to maintain this pressure shall be measured through a meter or other means satisfactory to the City Inspector. The amount of water entering the pipe during the test shall be considered as the leakage.

Leakage shall not exceed the rate of fifteen (15) gallons per inch of diameter per twenty-four (24) hours per mile of pipe tested. Any noticeable leak shall be stopped and any defective pipe shall be repaired or replaced with new sections and the test repeated. All water, temporary bulkheads, testing equipment or materials necessary for the test shall be furnished by the pipeline contractor.

100.16 Disinfection: Subsequent to the pressure test and prior to acceptance of the work, the entire water system, including pipeline, all fittings and other appurtenant equipment, shall be disinfected by the pipeline contractor in accordance with A.W.W.A. "Standard for Disinfecting Water Mains" C651, latest version.

Treated water with 25 ppm of free chlorine shall be retained in the entire water system for at least twenty-four (24) hrs. and a free chlorine residual of not less than 10 PPM shall be produced in all parts of the system after the twenty-four hour period has elapsed.

After chlorination, the water shall be flushed from the entire water system, until replacement water test is equal chemically and bacteriologically to that of the permanent source of supply. It shall be the responsibility of the pipeline contractor to dispose of all chlorinated water in a safe, environmentally acceptable manner.

The City will perform all necessary bacteriological analyses.

100.17 Valve boxes: It shall be the responsibility of the developer and/or pipeline contractor to secure accurate locations of all valves affected by the project.

All on-site, off-site, and tapping valves shall be tied and raised to grade by contractor in accordance with Water Standard 101. Water valve covers on all construction projects that are covered over before, during, and after construction operations shall be tied out with exact measurements by the contractor's surveyors. A copy of these survey measurements shall be given to the City's Inspector prior to covering over the water valves.

All water valve covers and cans shall be adjusted to grade within ten (10) working days after being paved over. Not withstanding, the Contractor shall raise all valves within the vicinity of and before placing traffic detector loops. The Contractor shall be responsible for cleaning all water valve can necks clear of debris before, during and after construction, and marking all ties clearly in the field for the City's use during construction operations.

The Contractor shall verify, in writing, to the City's Inspector prior to covering over water valves that:

1. Water valve can necks are cleaned, tied out and the ties are transmitted herewith.
2. Water valve ties are marked clearly in the field and the Contractor has field reviewed ties with the City Inspector.
3. The contractor shall provide the valve ties to the City Inspector for review and acceptance for all newly installed valves prior to completion of the project.

100.18 Final Inspection: Final inspection shall be made after complete installation of water system and appurtenances, disinfection, raising to grade of on-site, offsite, and tapping valves, meter boxes and installation of meter box and fire hydrant concrete collars.

100.19 All City dedicated fire hydrants shall be painted after installation with approved Safety Orange Acrylic Enamel, Iron Guard DTM as manufactured by Keylon.

100.20 The City shall provide final approval to tie new water main only after successful pressure test, disinfection and sampling has been completed. When water mains and services, or any portion of them, have been pressure tested, disinfected and otherwise completed to the extent they are operable, the City may, at its sole discretion assume operation of the pipeline facilities and place them into service to provide water for fire protection and other uses. This may occur prior to the final inspection and final acceptance of all work.

The City shall provide the developer with notification when it shall commence operation of new on site facilities. Following such notification, all water valves and other appurtenances shall be operated by the **CITY PERSONNEL ONLY.**

This action by the City shall not be interpreted to relieve the developer and/or his contractor of the full responsibility for completing the work in its entirety, for correcting defective work, and for protecting the work from damage.

CITY OF ORANGE
WATER SERVICE CONSTRUCTION NOTES

SECTON 200

CITY INSPECTOR SHALL BE NOTIFIED OF ANY AND ALL WATER SYSTEM CONSTRUCTION 24 HOURS PRIOR TO BEGINNING CONSTRUCTION AT (714) 744-5526

200.1 Materials shall be handled and installed in a workmanlike manner by a contractor holding a valid Class A or C-34 Specialty License from the State of California.

200.2 Excess material shall be returned to the Water Yard prior to final approval.

200.3 Normal working hours are 6:30 a.m. to 4:00 p.m. Monday thru Thursday, excluding City-observed holidays. The City Inspector shall be notified 24 hours prior to any work.

200.4 Water service laterals shall be installed in accordance with the "City of Orange Water Standards".

200.5 Materials: Materials shall be provided by the contractor, except for some water meters. City supplied meters shall be decided on a case-by-case basis.

200.5.1 ¾" services shall be plumbed with ¾" Type K copper tubing. Connections shall be made with 1" Mueller 110 compression couplings or equal.

200.5.2 1" services shall be plumbed with 1" Type K copper tubing. Connections shall be made with 1" Mueller 110 compression couplings or equal.

200.5.3 1 ½" services shall be plumbed with 1 ½" type K copper tubing. Connections shall be made with 1 ½" Mueller 110 compression couplings or equal, or soldered copper couplings.

200.5.4 2" services shall be plumbed with 2" Type K copper tubing. Connections shall be made with 2" Mueller 110 compression couplings or equal, or soldered copper couplings.

200.5.5 Polyethylene wrap: Polyethylene tubing shall be installed over copper tubing per A.W.W.A "Standard for Polyethylene Encasement for Ductile-Iron Pipe Systems" C-105, latest edition.

200.6 Trench Excavation: Service laterals shall be installed perpendicular to the alignment of the main line, and at a minimum depth of 30 inches cover relative to finished grade.

An encroachment permit shall be required for any excavation within public right-of-way. The permit shall be obtained from the City of Orange Public Works Department at 300 E. Chapman Ave.

200.7 Trench Backfill: Backfill within the PIPE ZONE, six (6) inches below to twelve (12) inches above pipe, shall be sand or other select material, as determined by the City Inspector. Rocky or unsuitable bedding and backfill materials shall be replaced with approved sand.

For purposes of definition: Sand is material graded from fine to coarse, containing less than 10 percent by weight of loam and clay, that all passes a ¼-inch sieve with no more than 5 percent by weight remaining on a No. 4 sieve.

200.8 Installation:

200.8.1 Service taps shall be at an angle of forty-five degrees (45) relative to the horizontal plane.

Direct tapping of Pressure Class 350 ductile iron pipe shall conform to the following requirements:

1. ¾-inch service shall be direct taps to all size mains.
2. 1-inch service shall be direct tapped on 6-inch and larger. 4-inch water mains shall be installed with a service saddle connection.
3. 1-1/2 inch service shall be direct tapped on 14-inch and larger water mains. 12-inch water mains and smaller shall be installed with a service saddle connection.
4. 2-inch service shall be direct tapped on 16-inch and larger water mains. 14-inch water mains and smaller shall be installed with a service saddle connection.

200.8.2 All tapping saddles shall be all bronze, double strap, CS thread.

200.8.3 Angle meter stops shall be installed per Standard Drawing 201.

Accurate locations of all angle meter stops shall be furnished to the City Inspector, and all angle meter stops shall be exposed and in proper alignment and location prior to setting of meters & meter boxes by the City.

200.8.4 No more than one splice will be allowed per service and only with City approval.

200.9 Service laterals installed after the main line has been pressure tested shall be tapped into a charged pipeline under normal system pressure. All corporation and angle meter stops shall be left exposed to facilitate proper inspection and detection of leaks.

Service laterals installed on dry main prior to the mainline pressure test shall be pressure tested with the mains. All corporation and angle meter stops shall be left exposed to facilitate proper inspection and detection of leaks.

200.10 In industrial, commercial, apartment and condominium developments where meter is installed in a landscaped area, a concrete collar 6" in width and 4" in depth shall be constructed around each concrete meter box, except as noted per Standard Drawing #212.

200.11 Final Inspection: Final inspection of water service shall be made with final inspection of the main line.

CITY OF ORANGE WATER DEPARTMENT
MISCELLANEOUS CONSTRUCTION NOTES

SECTION 300

300.1 Jumpers: Jumpers (meter spacers) shall be per Standard Drawing 301, supplied and installed by the Developer only after obtaining the proper permit from the City.

Meter couplings shall be supplied to the Developer with issuance of permit. Jumper installation will not be permitted without meter couplings.

300.2 Detector Check: Detector check materials shall be installed per Standard 302. The pipeline from the detector check to the building shall be inspected by the Fire Department (288-2541).

300.3 An encroachment permit shall be required for any excavation within public right-of-way. The permit shall be obtained from the City of Orange Public Works Department at 300 E. Chapman Ave. (744-5528)

300.4 Double Check Detector and RPPD Assembly: Double check detector and RPPD assemblies shall be supplied and installed by developer/contractor, per Standard drawing 302, City Municipal Code-Chapter 13.36, and California State Department of Health Services pursuant to the State of California Code of Regulations, Title 17, Sections 7583 through 7622.

300.5 Air and Vacuum Assembly: Air and vacuum assemblies and related appurtenances shall be installed per Standard Drawing 305.

300.6 Backflow Prevention Device: Backflow prevention devices shall be supplied and installed by developer/contractor per Standard Drawing 306, City Municipal Code – Chapter 13.36, and California State Department of Health Services pursuant to the State of California Code of Regulations, Title 17, "Regulations Relating to Cross-Connections".

300.7 Well Destruction: Destruction of any well within the City of Orange shall comply with California Department of Water Resources Bulletin No. 74-81 & 74-90, or latest revision thereto, and Standard Drawing 307.

REGISTERED PROFESSIONAL ENGINEER KENETH C. TAKIO NO. 56185 EXP. 12-31-10 CIVIL STATE OF CALIFORNIA

PLANS PREPARED BY:
WILLDAN Engineering
2401 East Katella Avenue, Suite 450
Anaheim, CA 92806-6073
714/978-8200 fax 714/978-8299
Kenneth C. Takio RCE: NO. 56185 EXPIRES 12-31-10 11/20/09 DATE

REVISIONS			
NO.	DESCRIPTION	APPR.	DATE

REVIEWED BY:

CITY OF ORANGE WATER DATE

CITY OF ORANGE
OFFSITE WATER IMPROVEMENT PLAN
FOR
401 S. TUSTIN STREET

Plan No.

Sheet W-4

County of Orange
OC PUBLIC WORKS
Architecture & Engineering

Revisions

Sym.	Descrip.	Date	By

Consultants
WILLDAN Engineering
2401 East Katella Avenue, Suite 450
Anaheim, California 92806-6073
714/978-8200 fax 714/978-8299
Kenneth C. Takio 56185 11/20/09
RCE No. DATE

A-E Seal

Drawn ___ Chkd. ___ Date 11/20/09

ALEXANDER + HIBBS, AIA, INC.
Architecture and Planning
1300 N. Grand Avenue, Suite A
Santa Ana, California 92705
(714) 558-9366

A-E ALEXANDER + HIBBS, AIA, INC. Date Nov. 20, 2009
Design Chkd.

Sht Title
Project COUNTY OF ORANGE HEALTH CARE AGENCY
401 SOUTH TUSTIN STREET
401 SOUTH TUSTIN STREET
ORANGE, CA 92866

PROJ. NO. 100-042-210-1900 H2407P20

Plan No. 52333-03608

Sheet W-4

0742 COUNTY OF ORANGE HEALTH CARE AGENCY 401 SOUTH TUSTIN STREET U:\jn17336_401_S_Tustin_Renovation\PS&E\Plans\pl-CITY-WATR-04.dwg Posted: 11/13/2009 1:47 PM

U:\jn17336_401_S_Tustin_Renovation\PS&E\Plans\pl-CITY-WATR-04.dwg Nov 13, 2009 - 1:47pm