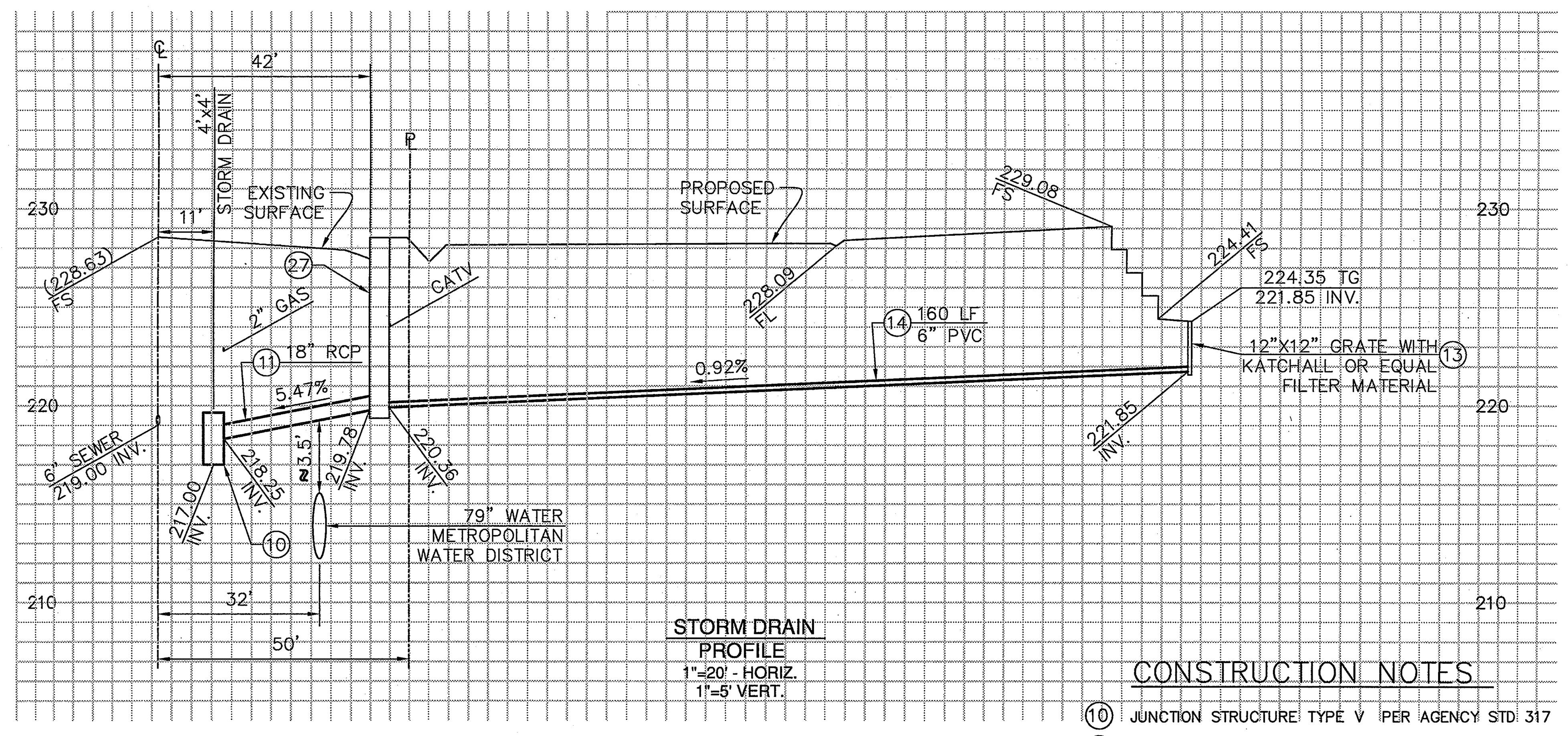

STORM DRAIN PROFILE
1"=20' - HORIZ.
1"=5' VERT.

CONSTRUCTION NOTES

- (10) JUNCTION STRUCTURE TYPE V PER AGENCY STD 317
- (11) CONSTRUCT 18" HDPE PIPE WITH FUSION JOINTS, SEE PROFILE THIS SHEET
- (13) 12"x12" CATCH BASIN No 1212 BROOKS OR EQUAL
- (14) CONSTRUCT 6" PVC PIPE, SEE PROFILE SHEET C-3
- (27) INLET TYPE I PER CITY OF ORANGE STD. PLAN NO. 301 WITH LOCAL DEPRESSION TYPE I PER CITY OF ORANGE STD. NO. 307.

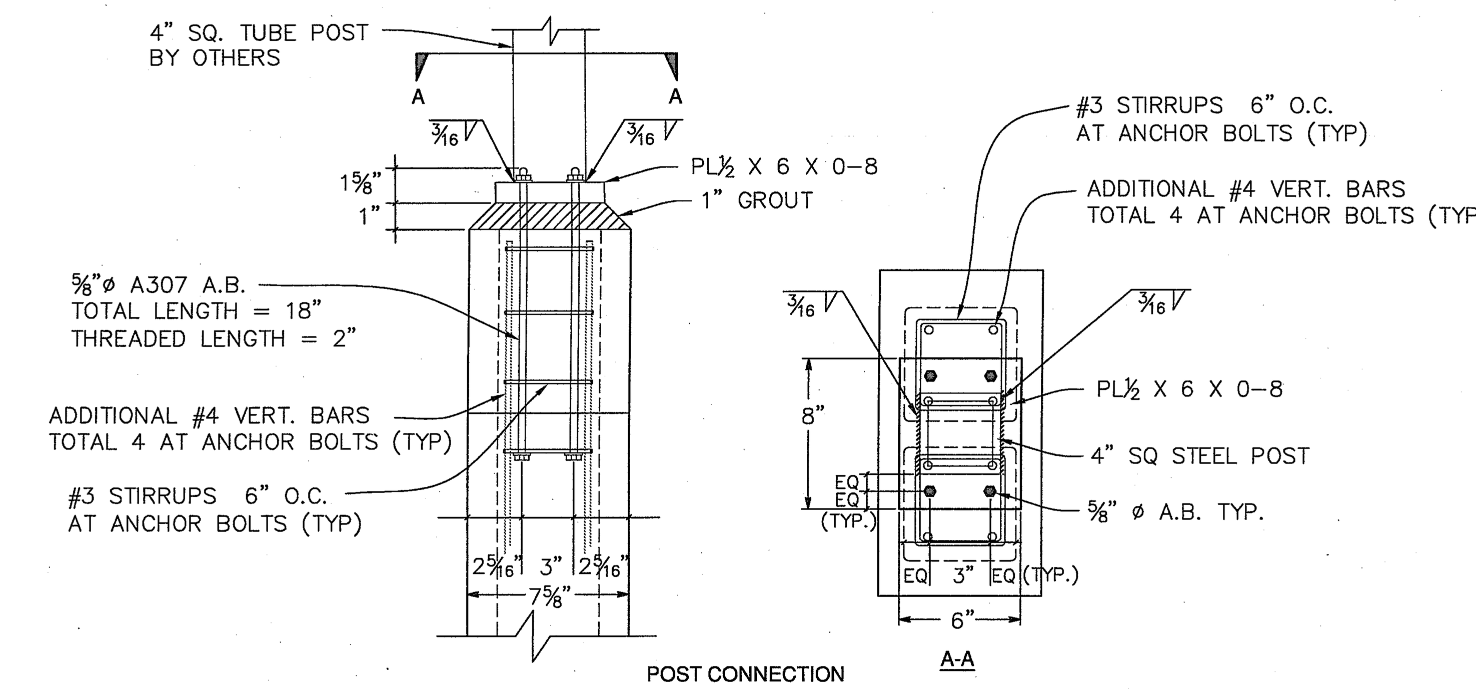

POST CONNECTION DETAILS
NTS

A-A

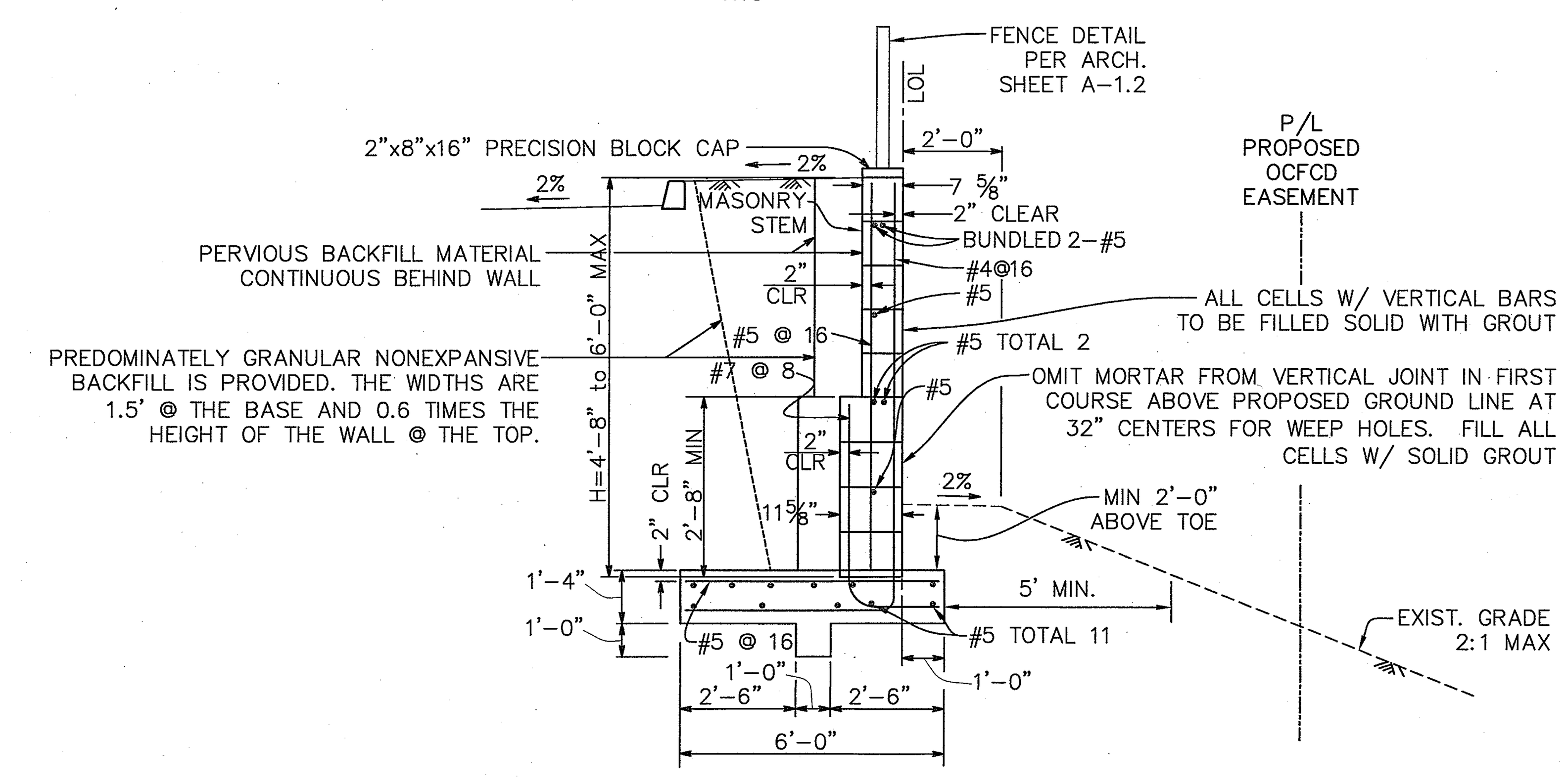

RETAINING WALL DETAILS
4' 8" to 6'-6" MAX. WALL
NTS

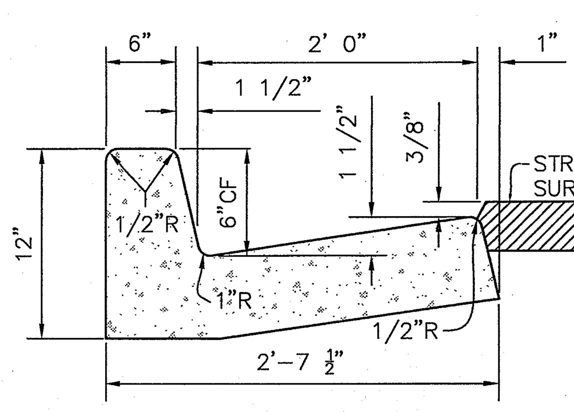

CURB & GUTTER (1)
TYPE A
N.T.S.

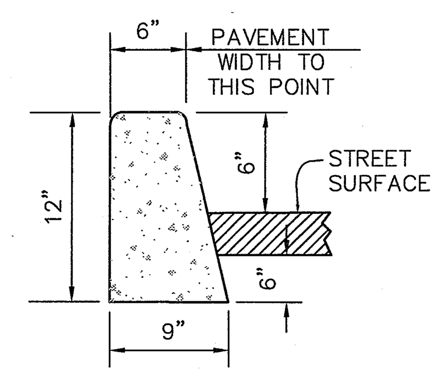

CURB ONLY (2)
TYPE B
N.T.S.

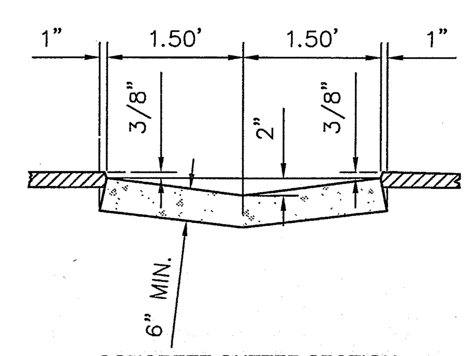

CONCRETE GUTTER SECTION (3)
N.T.S.

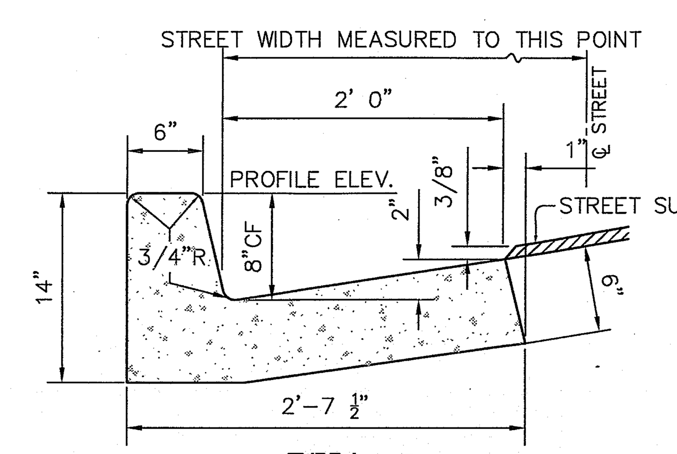

TYPE A (17)
(NORMAL)
N.T.S.

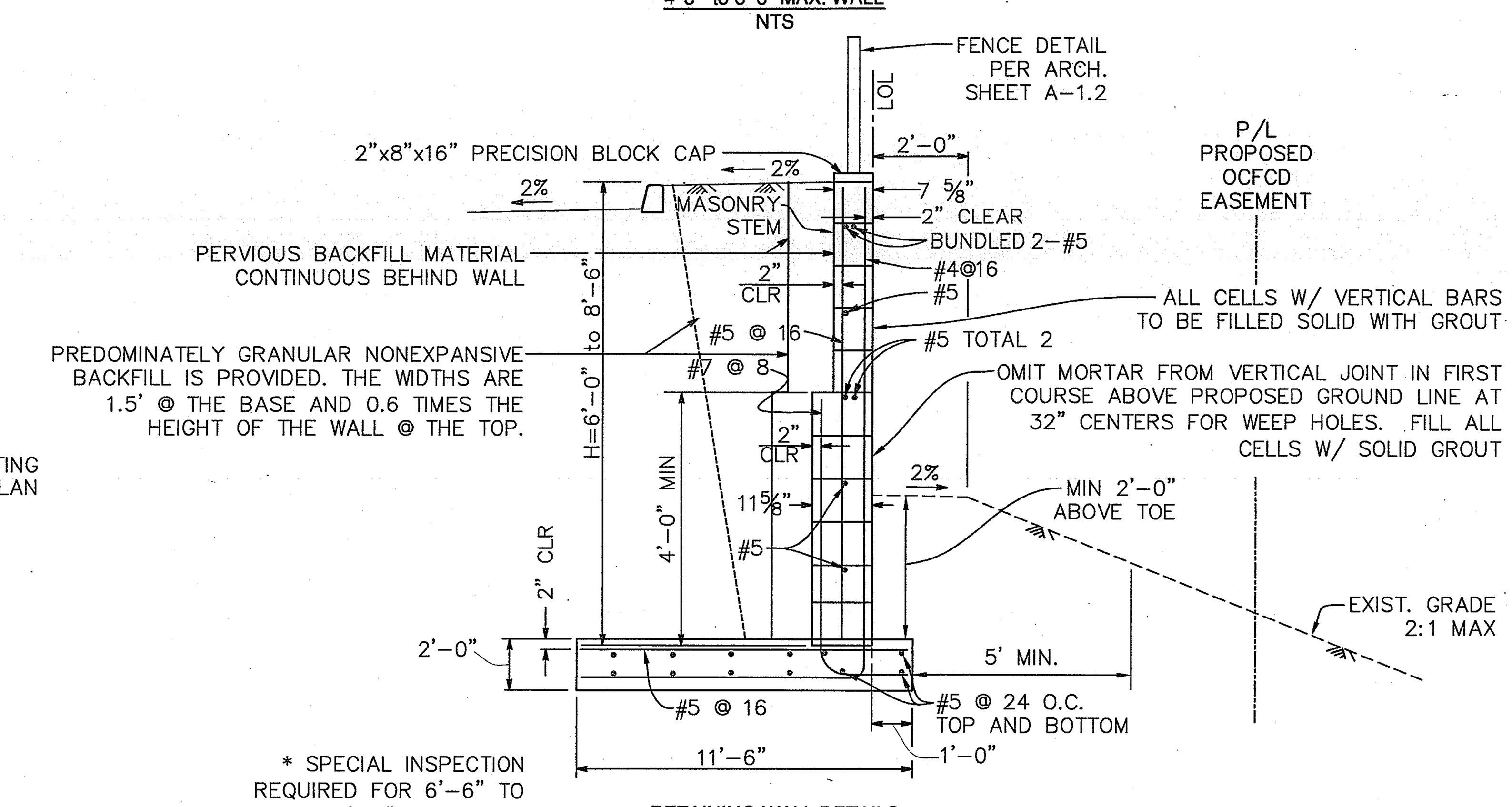

* SPECIAL INSPECTION REQUIRED FOR 6'-6" TO 8'-6" TALL WALL
f'c= 3000 psi

RETAINING WALL DETAILS
6'-6" to 8'-6" WALL
NTS

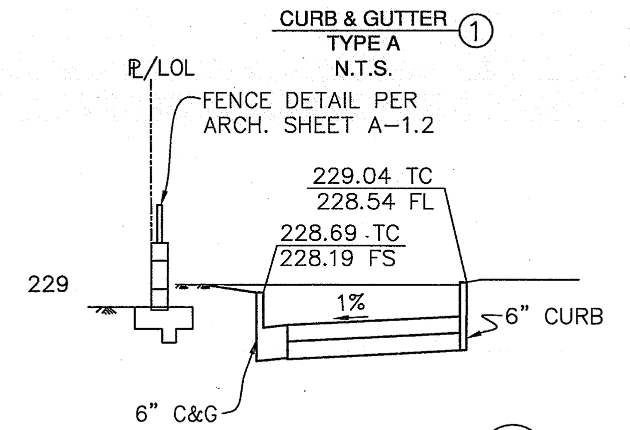

SECTION A-A (A)
HORIZONTAL 1"=10'
VERTICAL 1"=2'

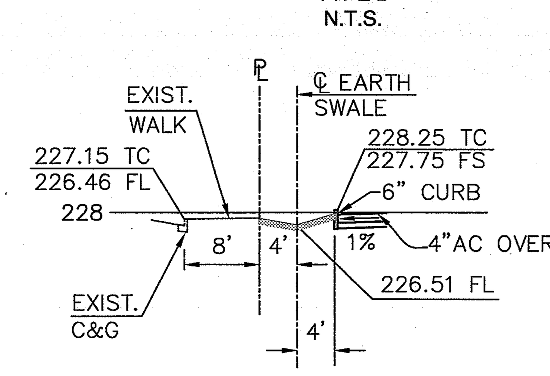

SECTION B-B (B)
HORIZONTAL 1"=10'
VERTICAL 1"=2'

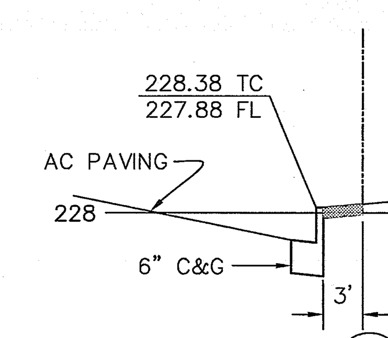

SECTION C-C (C)
HORIZONTAL 1"=10'
VERTICAL 1"=2'

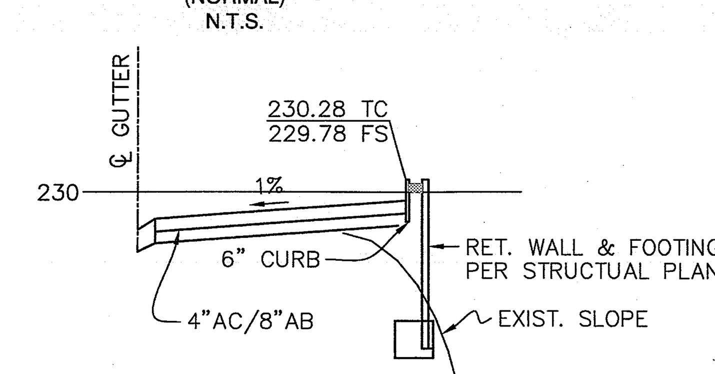

SECTION D-D (D)
HORIZONTAL 1"=10'
VERTICAL 1"=2'

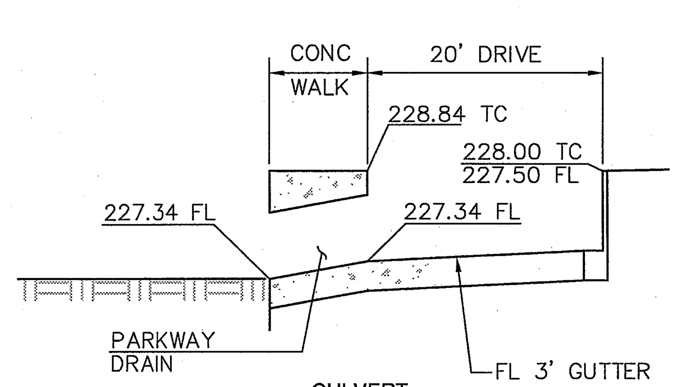

CULVERT
SECTION E-E (6)
N.T.S.

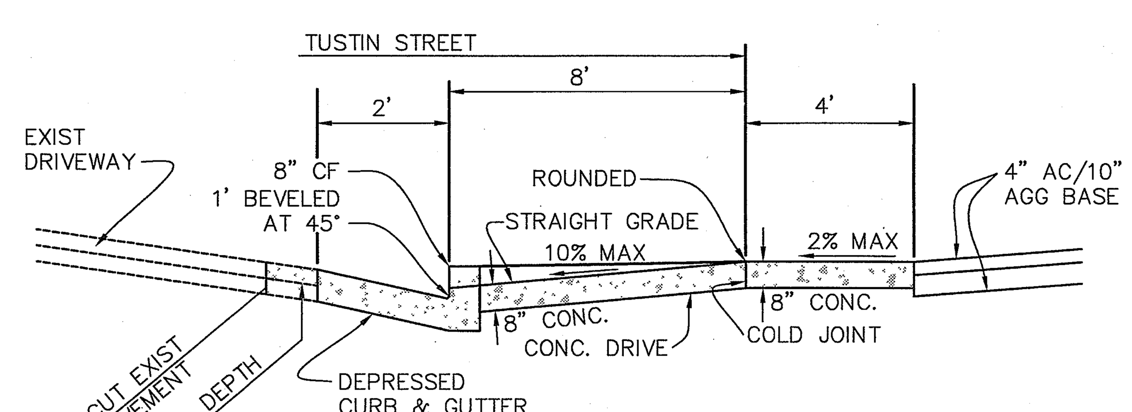

TYPICAL SECTION DRIVEWAY (18)
N.T.S.

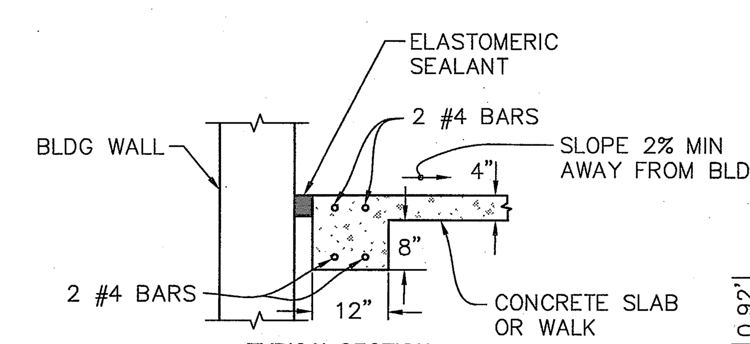

TYPICAL SECTION
EXTERIOR FLATWORK
SEE SOILS REPORT
N.T.S.

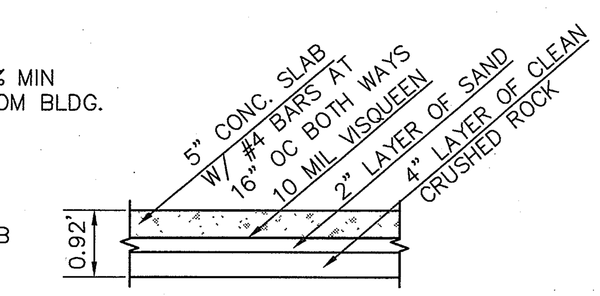

SLAB ON GRADE
N.T.S.

TYPICAL CONCRETE FLAT WORK DETAILS

RETAINING WALL NOTES:

FOR WALL HEIGHTS FROM 6" TO 4'-8" USE SPPWC STD. PLAN 618-2 TYPE A, STANDARD MASONRY RETAINING WALL.

FOR ADDITIONAL INFORMATION REFER TO SPPWC STD. PLAN 618-2 TYPE A STANDARD MASONRY RETAINING WALL.

THE RETAINING WALL PERMIT IS FOR CONSTRUCTION OF THE RETAINING WALLS THAT ARE NOT PART OF THIS HOUSE STRUCTURE SYSTEM.

f'c=2500 PSI CONCRETE - 0' to 6'-6" MAX. WALL
f'c=3000 PSI CONCRETE - 6'-6" to 8'-6" WALL
f'm=1500 PSI MASONRY

ALL STEEL REBAR 60KSI

ALL WELDS USE E70XX ELECTRODES

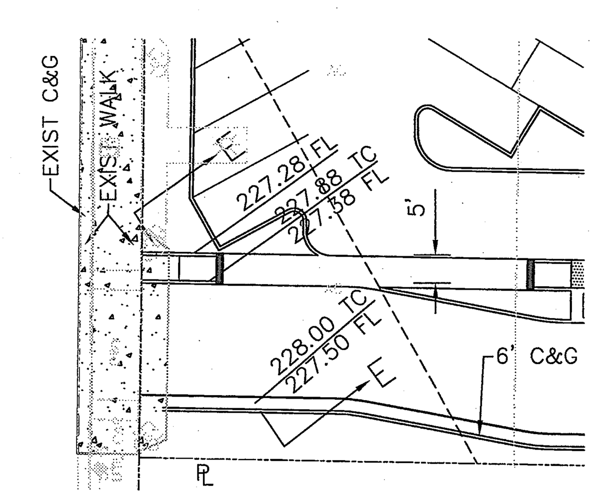

CULVERT DETAILS
N.T.S.

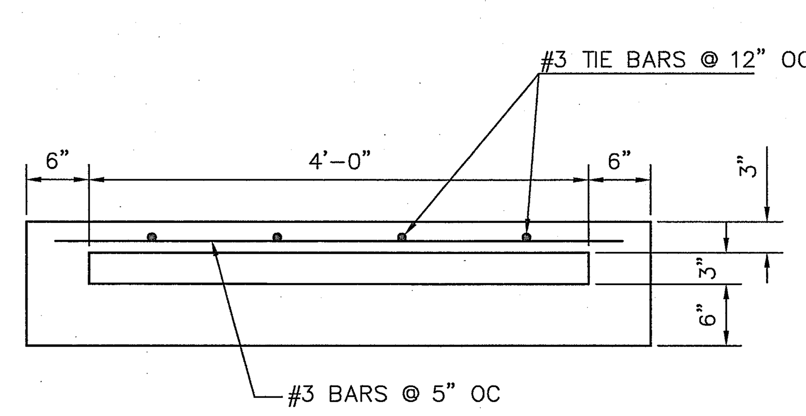

PARKWAY DRAIN (8)

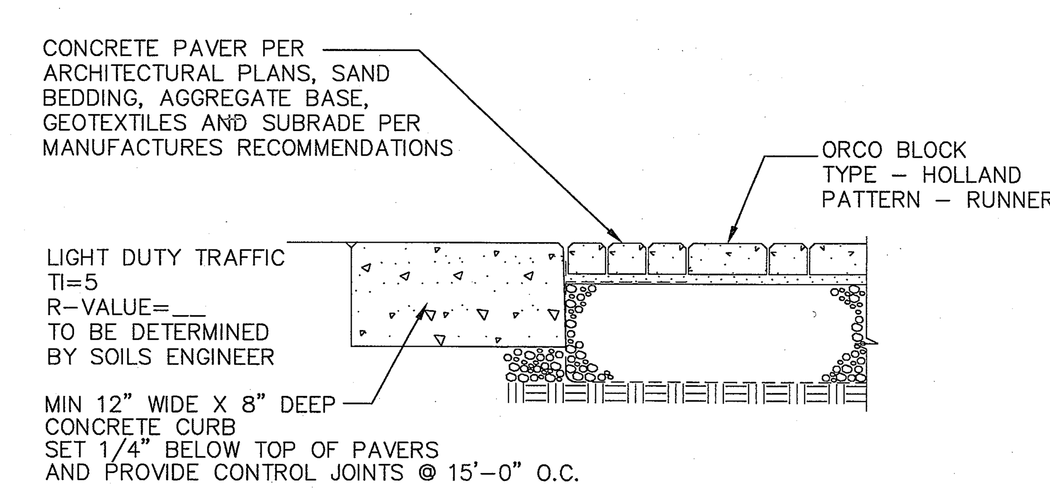

CONCRETE PAVER DETAIL
N.T.S.

NOTICE TO CONTRACTOR:

1. NOTIFY RICK BICKER OR TIM HATCH OF METROPOLITAN WATER DISTRICT'S (M.W.D.) SYSTEM OPERATIONS GROUP, TELEPHONE (714) 577-5084 AT LEAST TWO WORKING DAYS PRIOR TO STARTING ANY WORK IN THE VICINITY OF MWD'S FACILITIES.
2. FACILITIES CONSTRUCTED WITHIN METROPOLITAN WATER DISTRICT'S PERMANENT EASEMENT RIGHT-OF-WAY SHALL BE SUBJECT TO THE PARAMOUNT RIGHT OF METROPOLITAN TO USE THE EASEMENT FOR THE PURPOSE FOR WHICH IT WAS ACQUIRED. IF AT ANY TIME METROPOLITAN OR IT'S ASSIGNS SHOULD, IN THE EXERCISE OF THEIR RIGHTS, FIND IT NECESSARY TO REMOVE ANY OF THE FACILITIES FROM THE EASEMENT, SUCH REMOVAL AND REPLACEMENT SHALL BE AT THE EXPENSE OF THE OWNER OF THE FACILITY.
3. A LIST AND THE SPECIFICATIONS OF ALL CONSTRUCTION EQUIPMENT TO BE USED IN THE AREA OF M.W.D.'S PIPELINE MUST BE SUBMITTED FOR OUR REVIEW AND WRITTEN APPROVAL AT LEAST 30 DAYS PRIOR TO THEIR USE. PLEASE NOTE THAT M.W.D. WILL NOT PERMIT THE STORAGE OF CONSTRUCTION EQUIPMENT, THE STOCKPILING OF MATERIALS (INCLUDING SOIL), OR THE USE OF ANY VIBRATORY EQUIPMENT IN VIBRATORY MODE, WITHIN 25 FEET OF THE CENTERLINE OF M.W.D.'S PIPELINE.

GB090039

County of Orange
OC PUBLIC WORKS
Architecture & Engineering

Revisions

Sym.	Descrip.	Date	By
0742			

Consultants
WILLDAN Engineering
2401 EAST KATELLA AVENUE, SUITE 450
ANAHEIM, CALIFORNIA 92806-6073
714/978-8200 FAX 714/978-8299
PREPARED UNDER THE SUPERVISION OF
KENNETH C. TAYLOR R.C.E. 11/26/09 DATE
Drawn ___ Chkd. ___ Date 11/26/09

A-E Seal
REGISTERED PROFESSIONAL ENGINEER
KENNETH C. TAYLOR
NO. 56185
EXP. 12-31-10
CIVIL
STATE OF CALIFORNIA

A-E ALEXANDER + HIBBS, AIA, INC.
ALEXANDER + HIBBS, AIA, INC.
Architecture and Planning
1200 N. JEFFERSON ST. SUITE A
ANAHEIM, CALIFORNIA 92807
(714) 630-3686
Design SM Chkd. KT Date Nov. 26, 2009

Sht Title GRADING DETAILS
Project COUNTY OF ORANGE HEALTH CARE AGENCY
401 SOUTH TUSTIN STREET
401 SOUTH TUSTIN STREET
ORANGE, CA 92866
PROJ. NO. 100-042-210-1900 H2407P20

Plan No.
52333-03608

Sheet
C-3

0742 COUNTY OF ORANGE HEALTH CARE AGENCY 401 SOUTH TUSTIN STREET U:\jn17336_401_S_Tustin_Renovation\PS&E\Plans\pl-GRAD-PLAN-03.dwg Plotted: 12/3/2009 4:12 PM